This drawing is our exclusive property. Without our consent this drawing may not be reproduced or given to third.

Valid when no tolerance for angle is given (length of shorter side)

...10	10...50	50...120	120...
±1°	±30′	±20′	±10′

Valid for trials enquiries only

Valid when no tolerance is given

...6	6...30	30...120	120...
±0.1	±0.2	30...120	±0.5

Explanation of ISO-Tolerances

Dimension	ISO-marks	Deviations

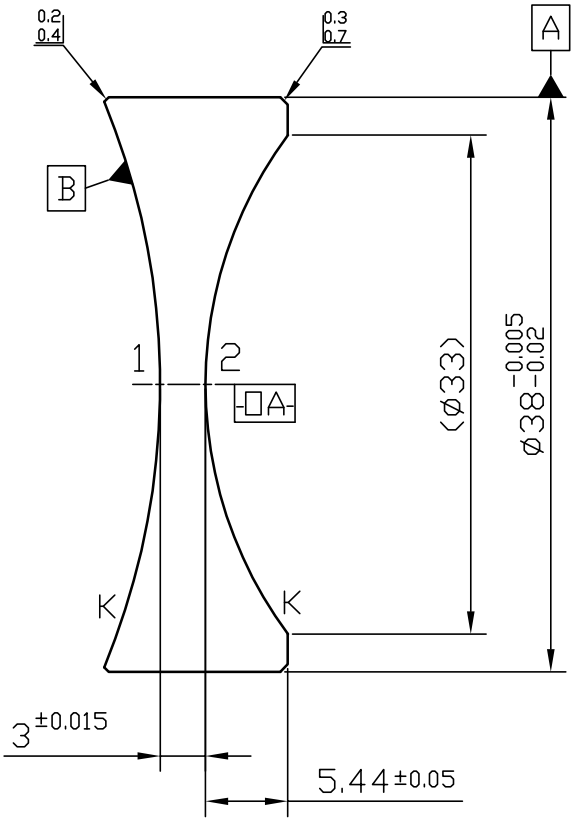

CTF =CRITICAL DIMENSION TO FUNCTION.

** SPECIFICATION ACC. ISO 10110 **

Left Surface	Material	Right Surface
R 49.1358 CC P3	S-NPH3	R 27.7273 CC P3
Øe 35.5	Nd=1.95906±0.0003	Øe 31.5
3/ 2(0.4/0.2)	Vd=17.47±0.5%	3/ 2(0.4/0.2)
4/ -		4/ 15″
5/ 2x0.1;C2x0.1;L5x0.025;E0.16	0/ 4	5/ 2x0.1;C2x0.1;L5x0.025;E0.16
λ -	1/ 2x0.1	λ -
	2/ 3;3	
To be cemented*		To be cemented*

Appl

Product YY1-430001

⑨			
⑧			
⑦			
⑥			
⑤			
④			
③			
②			
①			
	Alteration No.	Name	Date

Surface

Unit mm

	Date	Name
Prepared by		
Checked by		
Approved by		

Scale 2:1

Issue

Material

Title

LENS-03

No. 4 100 555 003

Subs for